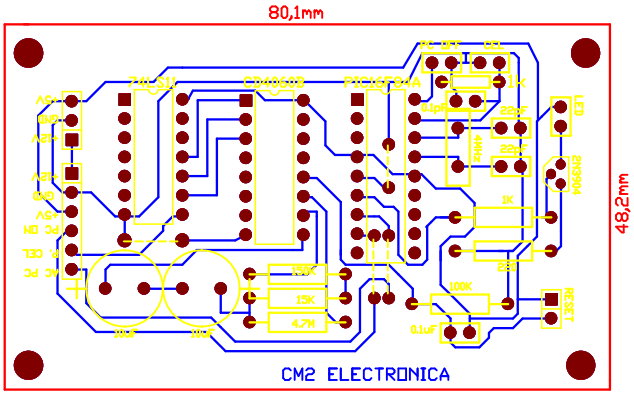
80,1mm
48,2mm
CM2 ELECTRONICA

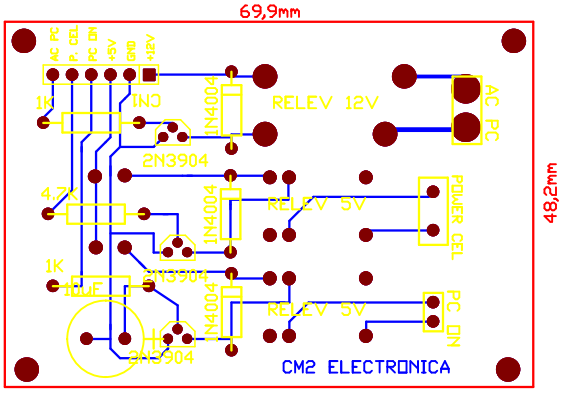
69,9mm
48,2mm
RELEV 12V
RELEV 5V
RELEV 5V
AC PC
POWER CEL
PC ON
CM2 ELECTRONICA

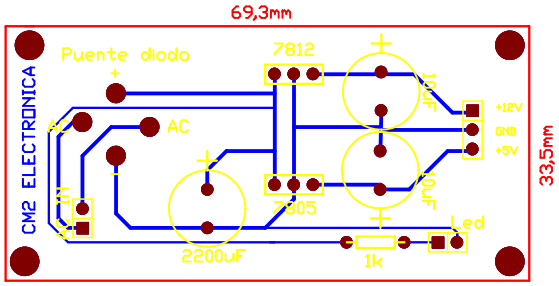
69,3mm
33,5mm
Puente diodo
7812
7805
AC
2200uF
1k
Led
CM2 ELECTRONICA